Lab 5: Mesh and Nodal Analysis

Introduction: In this lab we used Mesh analysis and nodal analysis to analyze our circuit and find currents/voltages. We would verify our measurements using these methods. For the first and second circuit we had two power sources but in the rest of them they only had one power source. It is important to note that for circuits 2, 3, and 4 we used a 3.9k resistor instead of 3.3k. We also used 3k resistor instead of 2.7 in circuits 4, 5, and 6. We ultimately simulated some of our circuits to see how our measured data compared to the theoretical.

Pre Lab:

1. Given

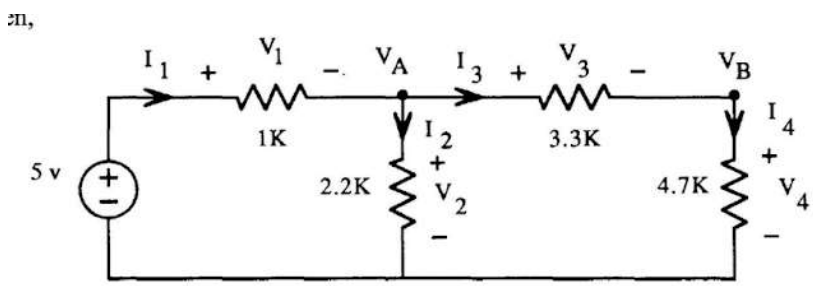

A) V1 $-\frac{V_A}{1k} + \frac{V_A}{2.2k} + \frac{V_A - V_B}{3.3k} = 5$

V2 $\frac{V_A - V_B}{3.3} - \frac{V_B}{4.7} = 0$

B) $\begin{bmatrix} 1+\frac{1}{2.2}+\frac{1}{3.3} & -\frac{1}{3.3} \\ \frac{1}{3.3} & -\frac{1}{8} \end{bmatrix} \begin{bmatrix} V_A \\ V_B \end{bmatrix} = \begin{bmatrix} 5 \\ 0 \end{bmatrix}$

C) $V_A = 3.17\,v$ $V_B = 1.86\,v$

D) $V_1 = 1.84\,v$ $I_1 = 1.83\,mA$
$V_2 = 3.17\,v$ $I_2 = 1.43\,mA$
$V_3 = 1.30\,v$ $I_3 = 0.49\,mA$
$V_4 = 1.86\,v$ $I_4 = 0.40\,mA$

2. Given

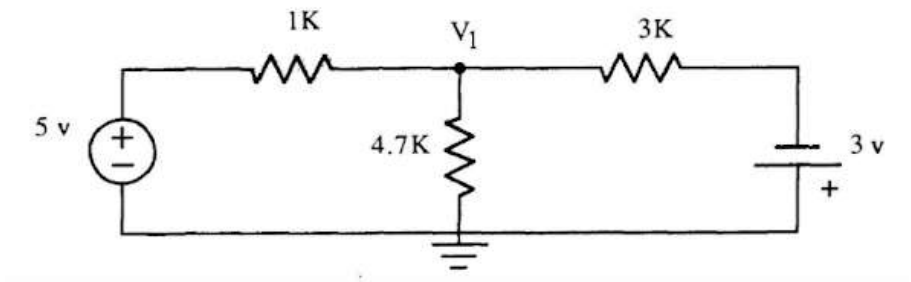

A. V1=2.59V

Circuit 1

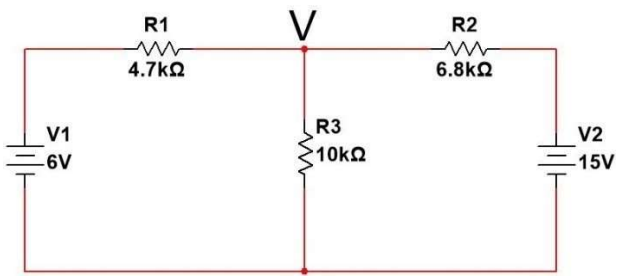

Mesh Analysis

Parameter	Theory	Experimental	Deviation
I R1	-0.3348mA	-0.32mA	3.030303%
I R2	-1.0921mA	-1.11mA	-1.63904%
I R3	0.758mA	0.75mA	1.055409%
V A	7.573V	7.5722V	0.017165%

Node Analysis

Parameter	Theory	Experimental	Deviation
V A	7.573V	7.5722V	0.017165%
I R3	0.758mA	0.75mA	1.055409%

Explanation: In this circuit we had 2 power supplies. One was 6 volts the other was 15 volts. We used mesh analysis to be able to find voltage from Node V to ground. We also used node analysis to get our theoretical values. In the end we made the circuit and compared our theoretical values to our measured values.

Circuit 2

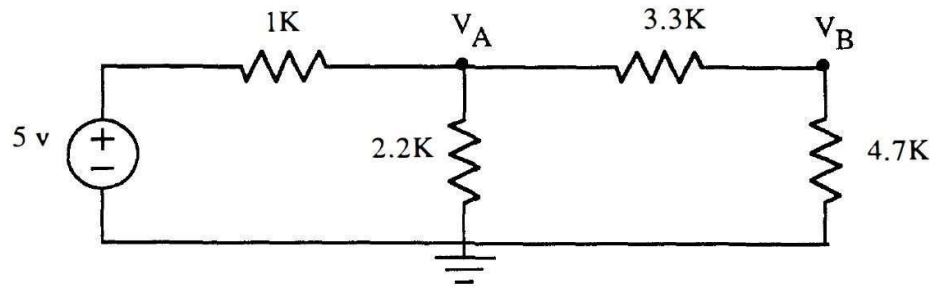

Parameter	Experimental
V A	3.2535V
V B	1,7559V
R1	0.9834kΩ
R2	2.1876kΩ
R3	3.9012kΩ
Req	2.7357kΩ

Explanation: For this circuit we measured our resistors actual resistance value and then measured the voltage at node VA and VB.

Circuit 3

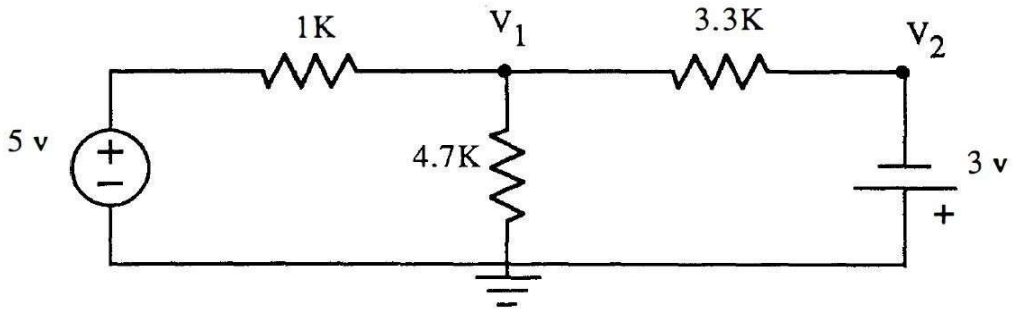

Parameter	Theory	Experimental
V 1	2.4728V	2.4628V
V 2	-3V	-2.9874V
V R1	2.5272V	2.5341V
V R2	5.4728V	5.4523V
V R3	2.4728V	2.4591V

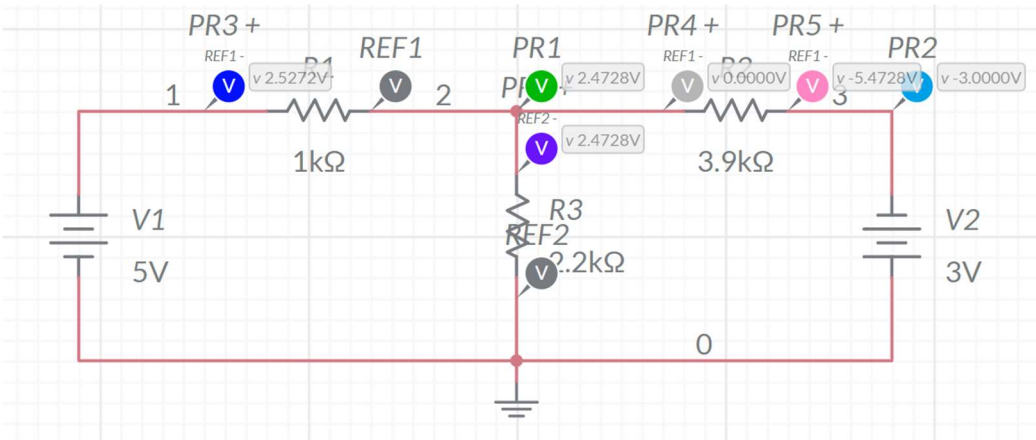

Explanation: First we measured the node voltages. Then we calculated our theoretical values. When we simulated, we saw it was really close to our theoretical values. Then we measured our branch voltages and compared them to the simulation.

Circuit 4

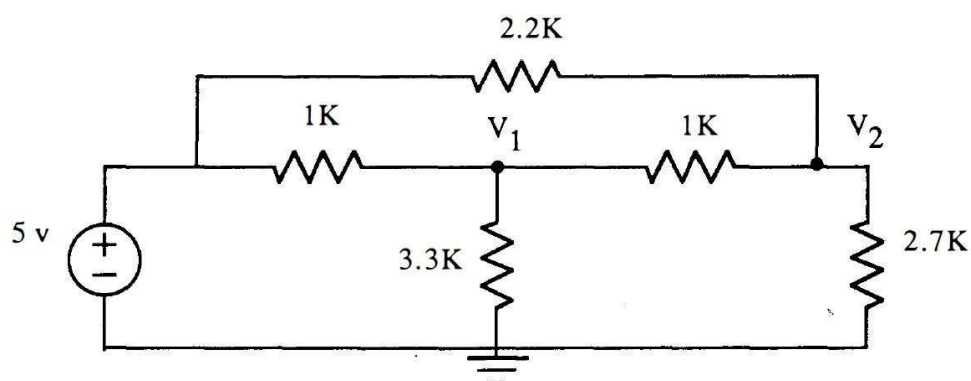

Parameter	Theory	Experimental
V 1	3.6953V	3.6829V
V 2	3.3380V	3.3959V

I1=1.44mA, I2=1.08mA, I3=0.36mA, Req=3.12kΩ

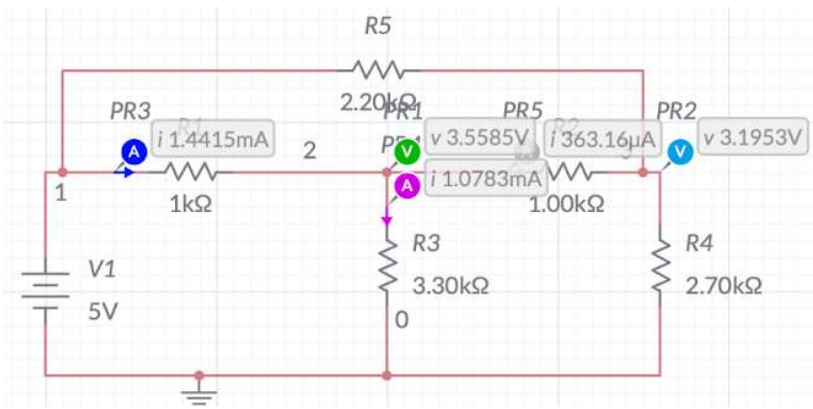

Explanation: First we measured Node V1 and Node v2. Then we calculated currents through all our resistors. After that we got equivalent resistance and simulated to compare our data.

Circuit 5

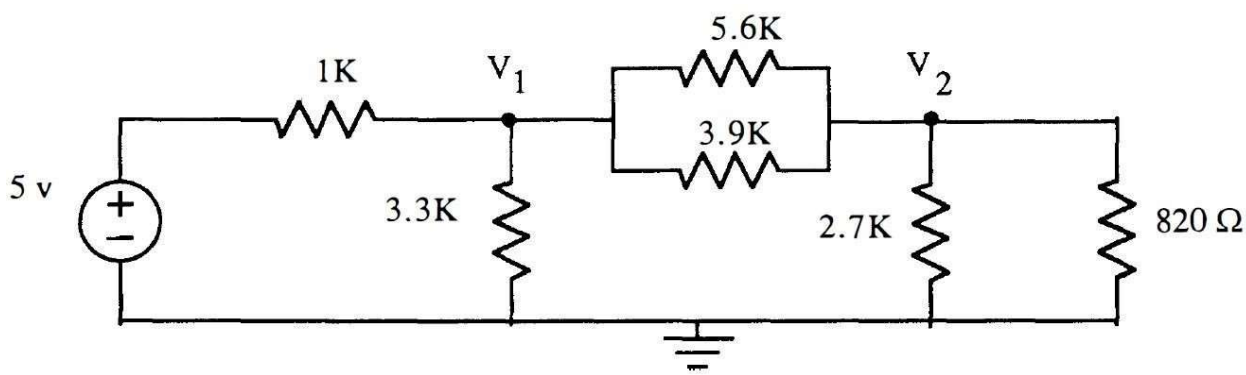

Ground Reference

Parameter	Theory	Experimental
V 1	2.9884V	3.0102V
V 2	0.6539V	0.6326V

I1=2.01mA, I2=1mA, I3=0.6mA, I4=0.41mA, I5=0.8mA, I6=0.8mA

Node V2 Reference

Parameter	Theory	Experimental
V 1	2.3345V	2.2159V
V 2	0	0.001mV

Ground Reference simulation

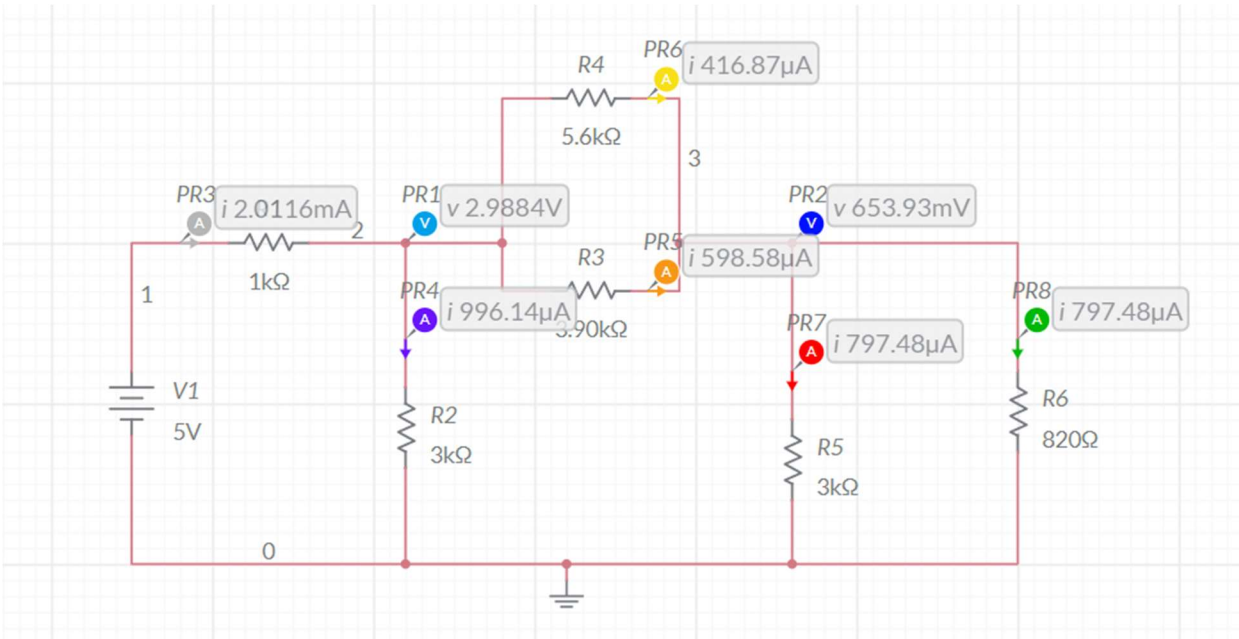

V2 Reference simulation

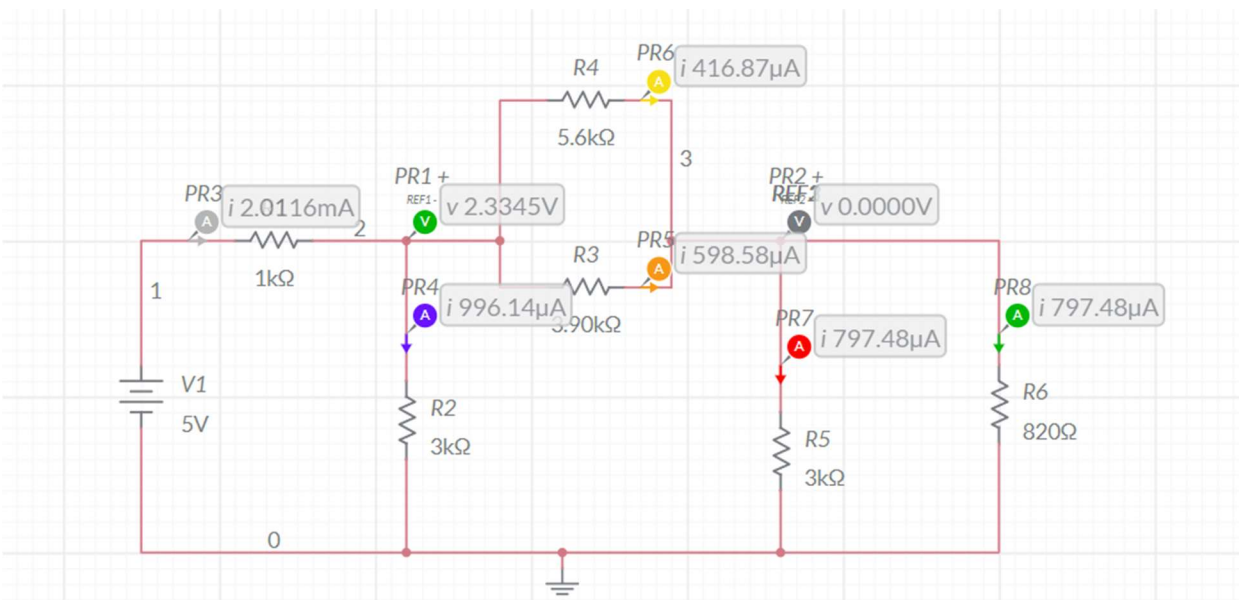

Explanation: First we measured node voltages with ground as reference. Then we measured the nodes with reference to v2. Then we calculated the current using those different node voltages, but the currents were the same when having either v2 or ground as reference.

Circuit 6

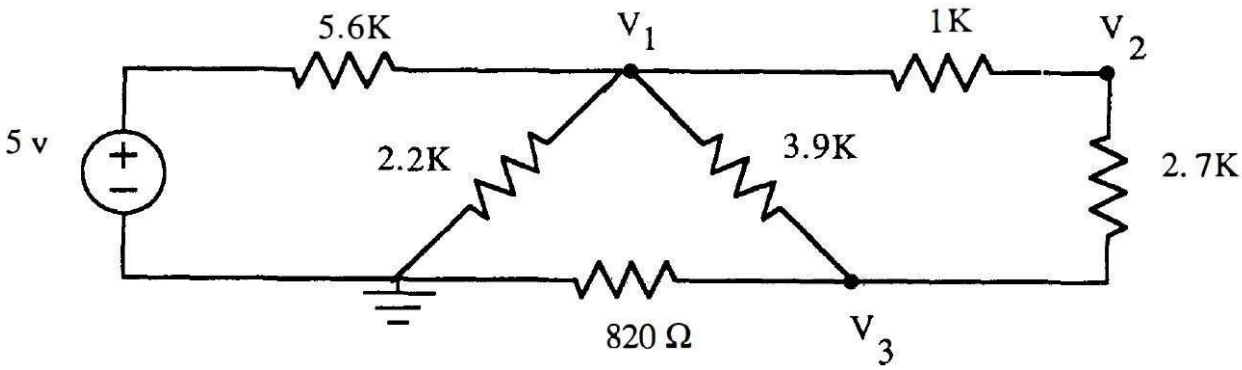

Parameter	Theory	Experimental
V 1	0.9010V	0.9221V
V 2	0.7418V	0.7456V
V3	0.2643V	0.2571V

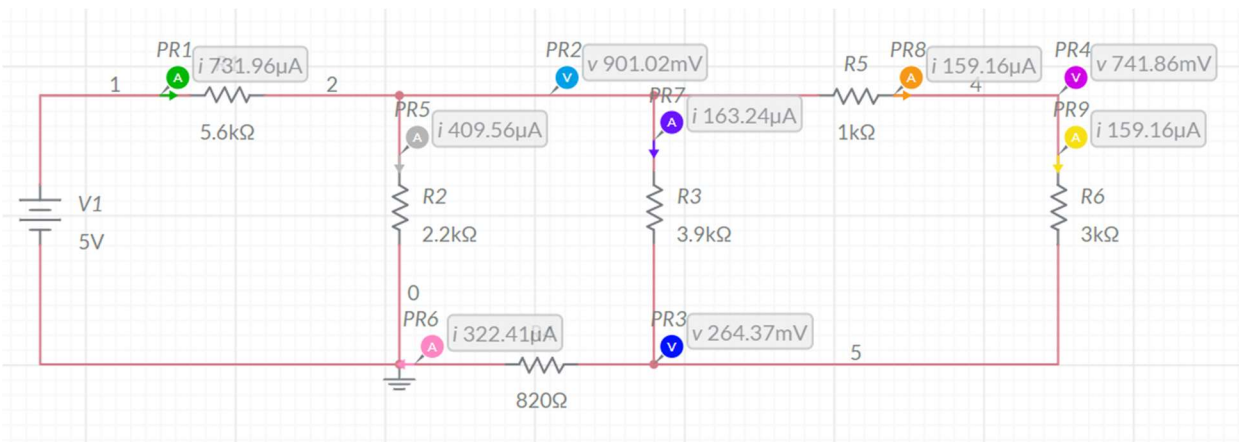

Post Lab:

1) Can node equations be used to analyze any circuit?

Yes, node equations can be used to analyze the circuit and even get node voltages.

2) Can mesh equations be used to analyze any circuit?

Yes, mesh equations can be used to analyze a circuit and is very efficient in getting current values.

3) Write and put in matrix form the node equations for circuit #11 (Figure 5) of the lab. Solve these equations and compare with your experiment results

$$\left(1+\frac{1}{8}+\frac{1}{2.3}\right)V_1 - \frac{1}{2.3}V_2 = 5$$

$$\left(-\frac{1}{2.3}\right)V_1 + \left(\frac{1}{2.3}+\frac{1}{1.694}\right)V_2 = 0$$

$$\begin{bmatrix} 1+\frac{1}{8}+\frac{1}{2.3} & -\frac{1}{2.3} \\ -\frac{1}{2.3} & \frac{1}{2.3}+\frac{1}{0.694} \end{bmatrix}\begin{bmatrix} V_1 \\ V_2 \end{bmatrix} = \begin{bmatrix} 5 \\ 0 \end{bmatrix}$$

$$V_1 = 2.98V \qquad V_2 = 0.653V$$

4) Write and put in matrix form the node equations for circuit #12 (Figure6) of the lab

$$\left(\frac{1}{5.6}+\frac{1}{2.2}+\frac{1}{3.9}+1\right)V_1 - (1)V_2 - \left(\frac{1}{3.9}\right)V_3 = \frac{5}{5.6}$$

$$-(1)V_1 + \left(1+\frac{1}{3}\right)V_2 - \left(\frac{1}{3}\right)V_3 = 0$$

$$-\left(\frac{1}{3.9}\right)V_1 - \left(\frac{1}{3}\right)V_2 + \left(\frac{1}{3.9}+\frac{1}{3}+\frac{1}{820}\right)V_3 = 0$$

$V_1 = 0.901V$

$V_2 = 0.741V$

$V_3 = 0.269V$

$$\begin{bmatrix} \frac{1}{5.6}+\frac{1}{2.2}+\frac{1}{3.9}+1 & -1 & -\frac{1}{3.9} \\ -1 & 1+\frac{1}{3} & -\frac{1}{3} \\ -\frac{1}{3.9} & -\frac{1}{3} & \frac{1}{3.9}+\frac{1}{3}+\frac{1}{820} \end{bmatrix}\begin{bmatrix} V_1 \\ V_2 \\ V_3 \end{bmatrix} = \begin{bmatrix} \frac{5}{5.6} \\ 0 \\ 0 \end{bmatrix}$$

5) Use your measured node voltages to calculate all branch currents for circuit #11 of the lab.

IR1= 2.01mA, IR2=1.00mA, IR3=0.60, IR4=0.42mA, IR5=0.80mA, IR6=0.80mA

6) Use your measured node voltages to calculate all branch currents for circuit #12 of the Lab.

IR1=0.73mA, IR2=0.41mA. IR3=0.16mA, IR4=0.32mA, IR5=0.16mA, IR6=0.16mA

Conclusion: In conclusion we learned how to use node and mesh analysis to find data to verify our measurement values. We also applied things such as serial and parallel resistor rules to be able to simplify our circuits. For the most part this lab went well, we had some deviation but that could be due to the resistors tolerance.